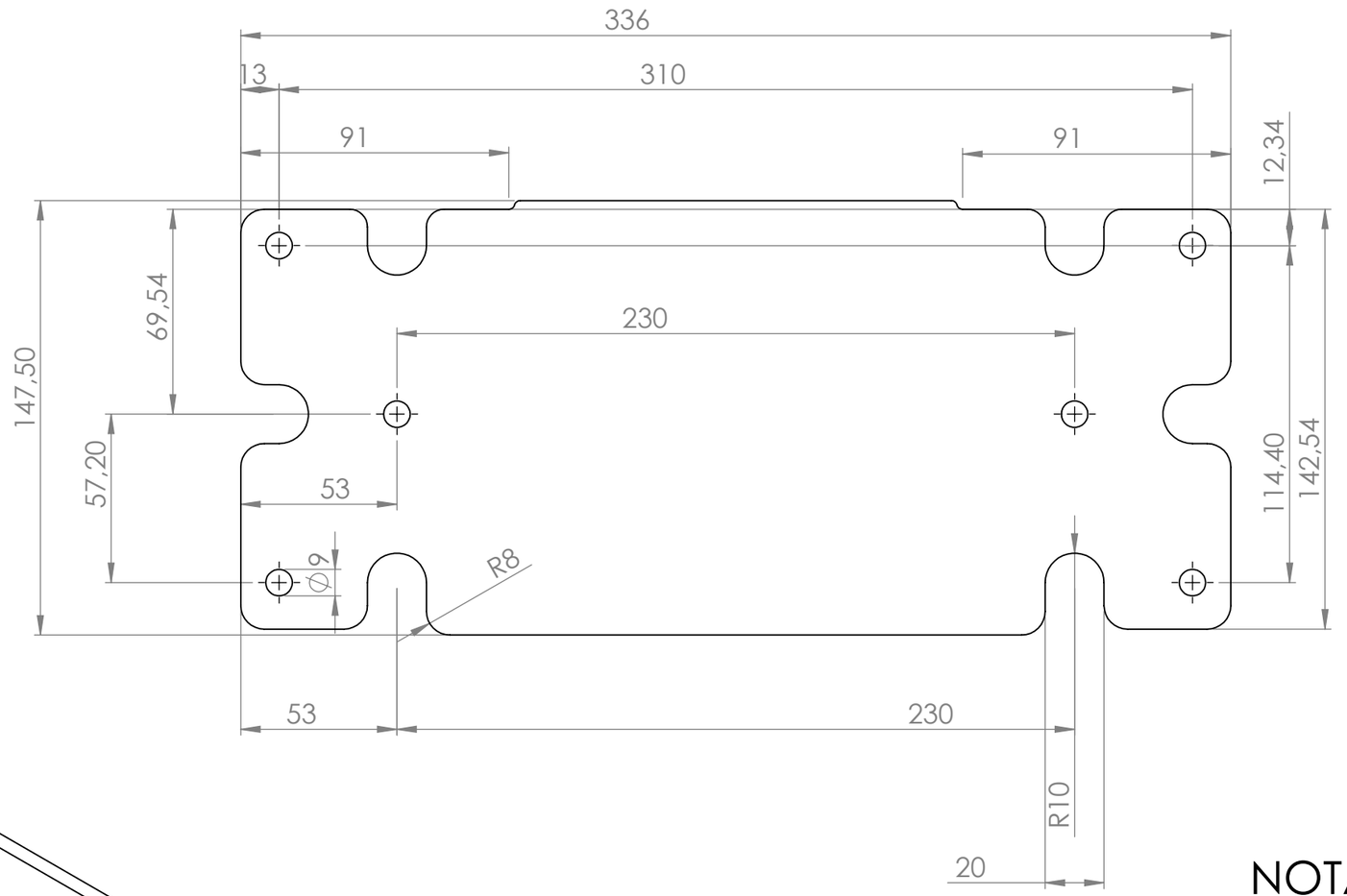

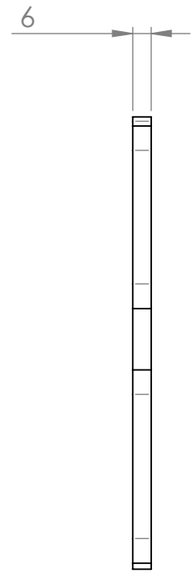

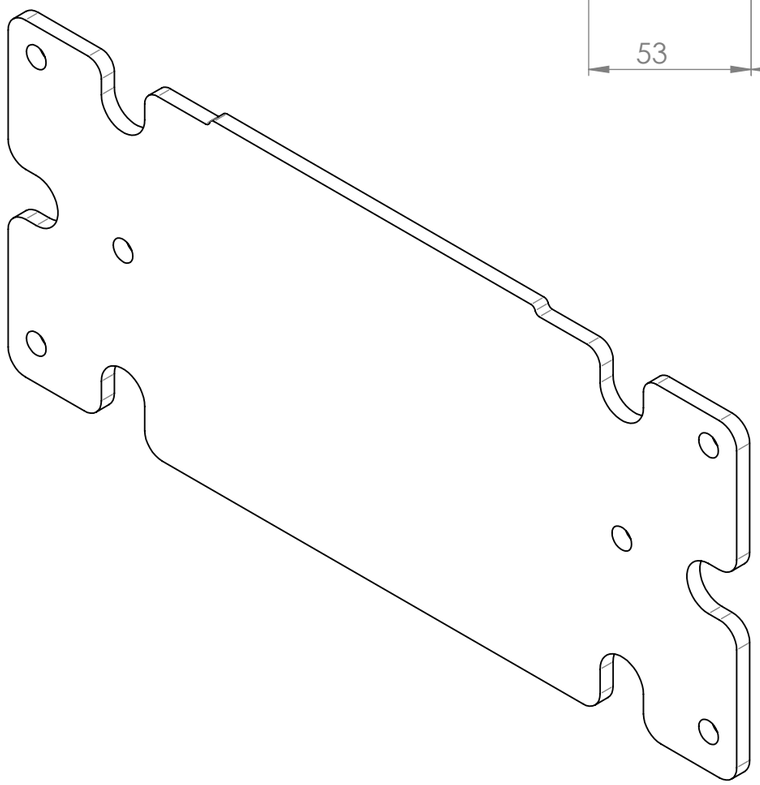

NOTA : le traitement surtec 650 sera fate après la prestation mécanique (**Sera exécutée et gérée par MR FLAMENT)**

UNLESS OTHERWISE SPECIFIED: DIMENSIONS ARE IN MILLIMETERS SURFACE FINISH: TOLERANCES:SURTEC650 LINEAR: ANGULAR:	FINISH: SURTEC650			DEBUR AND BREAK SHARP EDGES	DO NOT SCALE DRAWING	REVISION(A)
	NAME	SIGNATURE	DATE		TITLE:	
DRAWN						
CHK'D						
APPV'D						
MFG						
Q.A				MATERIAL: ALU5754-6	DWG NO HEATPLATEF2VA	A3
				WEIGHT:	SCALE:1:2	SHEET 1 OF 1